12604 MRAD RIFLE ASSEMBLY

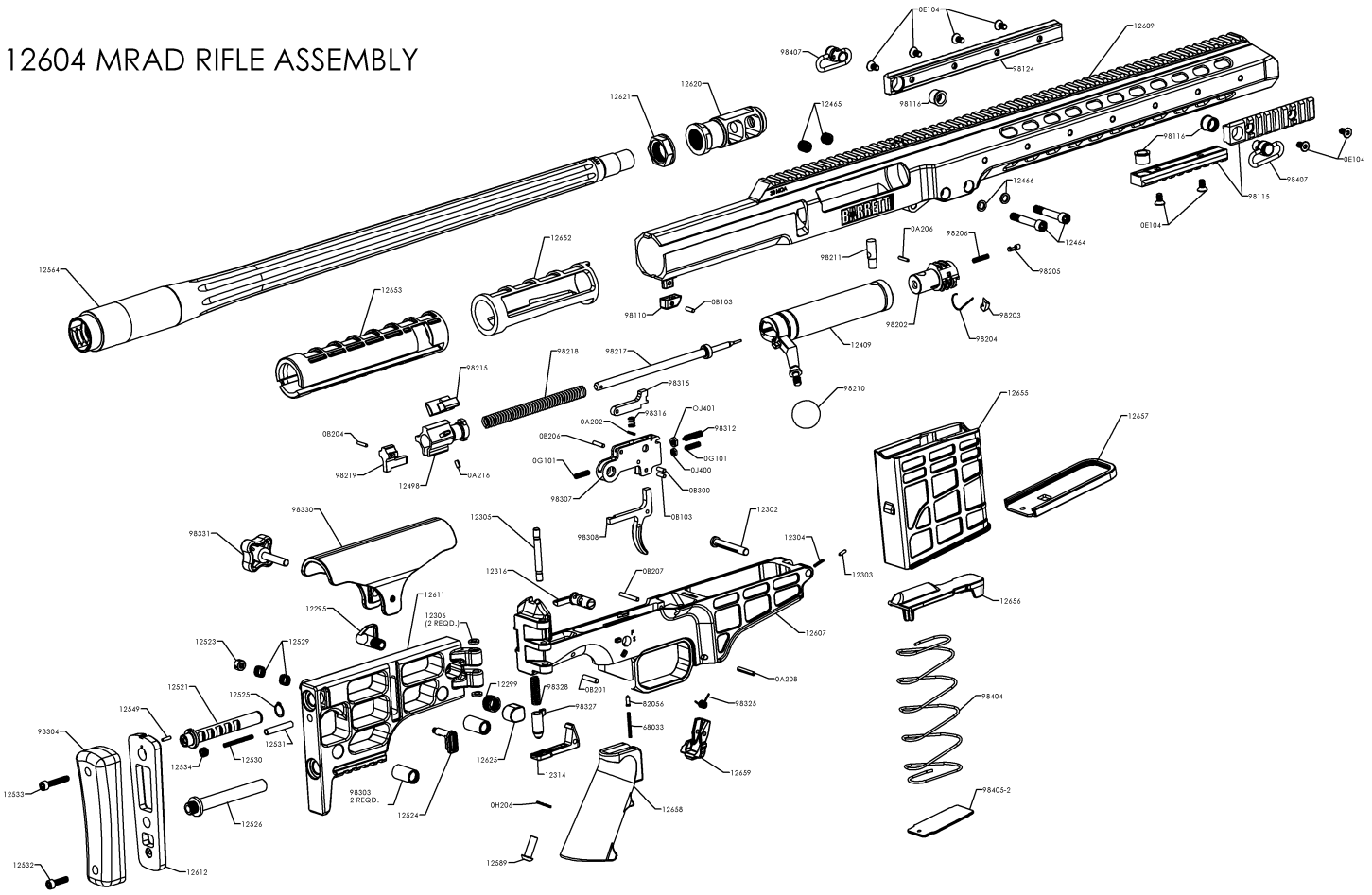

BARRETT